Sunset Trading®
a division of Sunset Furniture Int. llc

701 E Industrial Pk Dr
Manchester, NH 03109
sunsettrading.com

Please Contact us if you are
Missing Parts or have any Questions
877-364-8464
info@sunsettrading.com

Thank you for purchasing this quality product!
It has been engineered for easy assembly yet constructed for durability.
Please take the time to read and follow the instructions while assembling.

ASSEMBLY INSTRUCTIONS

SKU: DLU-ADW-C50-RTA

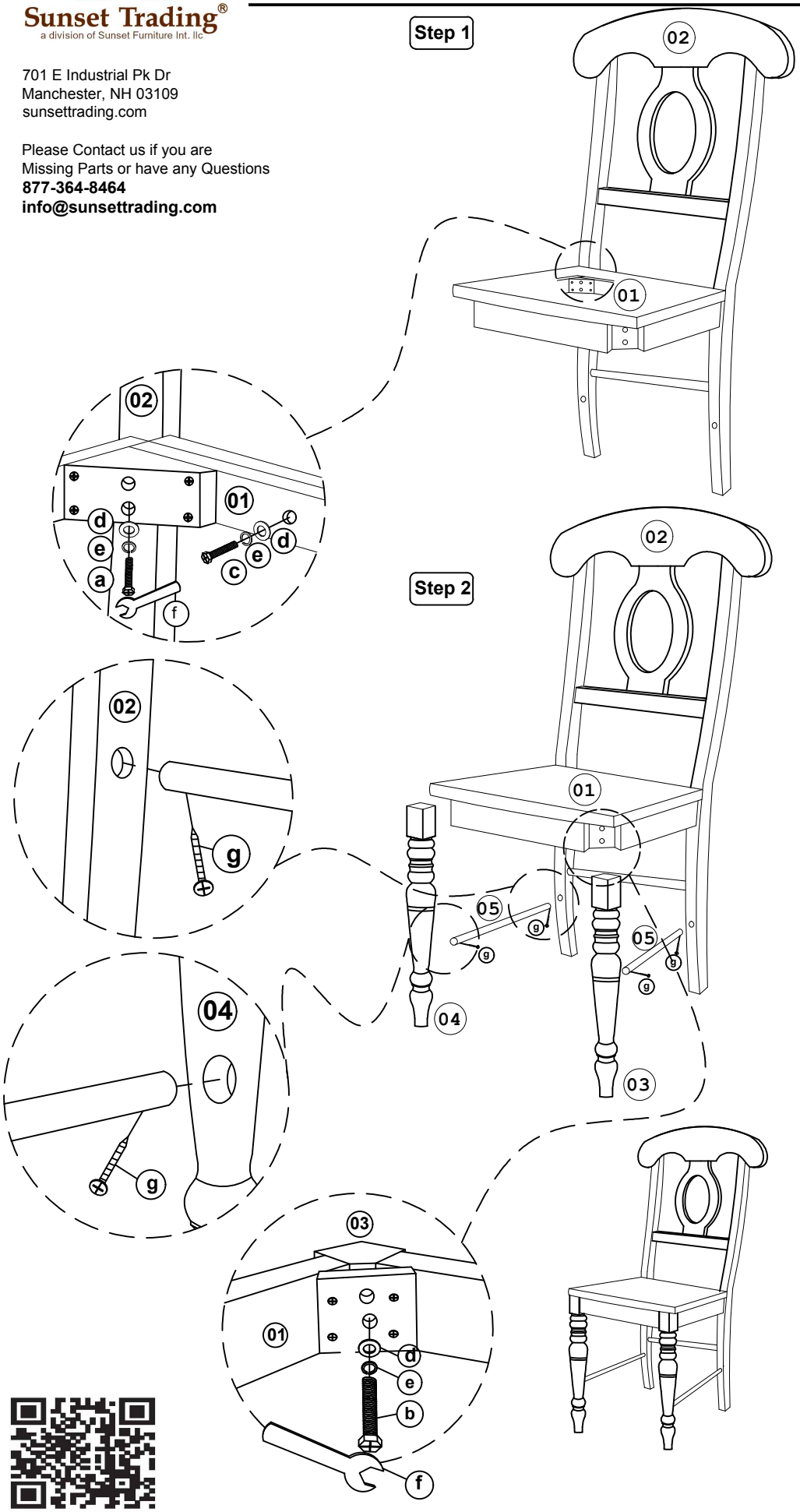

List of Parts For 1 Set

Code	Figure	Part	Qty.
01		Seat Frame	1
02		Chair Back	1
03		Front Leg (R)	1
04		Front Leg (L)	1
05		Side Stretcher	2

List of Hardware For 1 Set

Code	Figure	Hardware	Qty.
a		Hex. Bolt M6 x 80mm	4
b		Hex. Bolt M6 x 60mm	4
c		Hex. Bolt M6 x 40mm	2
d		Flat Washer $\frac{1}{4}$" x 18mm	10
e		Spring Washer $\frac{1}{4}$"	10
f		Spanner 10mm	1
g		PHRS Screw #8 x 1 $\frac{1}{4}$"	4

⚠ IMPORTANT NOTES:

- Keep all hardware and small parts out of reach of children.
- Remove all staples and packing straps before you start to assemble.
- Do not discard main cartons and wrapping material until assembly is complete.
- Check to be sure you have all parts and hardware.
- Place all wooden parts on a clean soft surface to avoid parts from being scratched
- Do not tighten all screws / bolts until completely assembled.
- Check tightness 3x's/year, with use screws can become loose.
- Do not attempt to repair or modify parts that are broken or defective. Please contact us immediately.
- Enjoy your new furniture!

MADE IN MALAYSIA